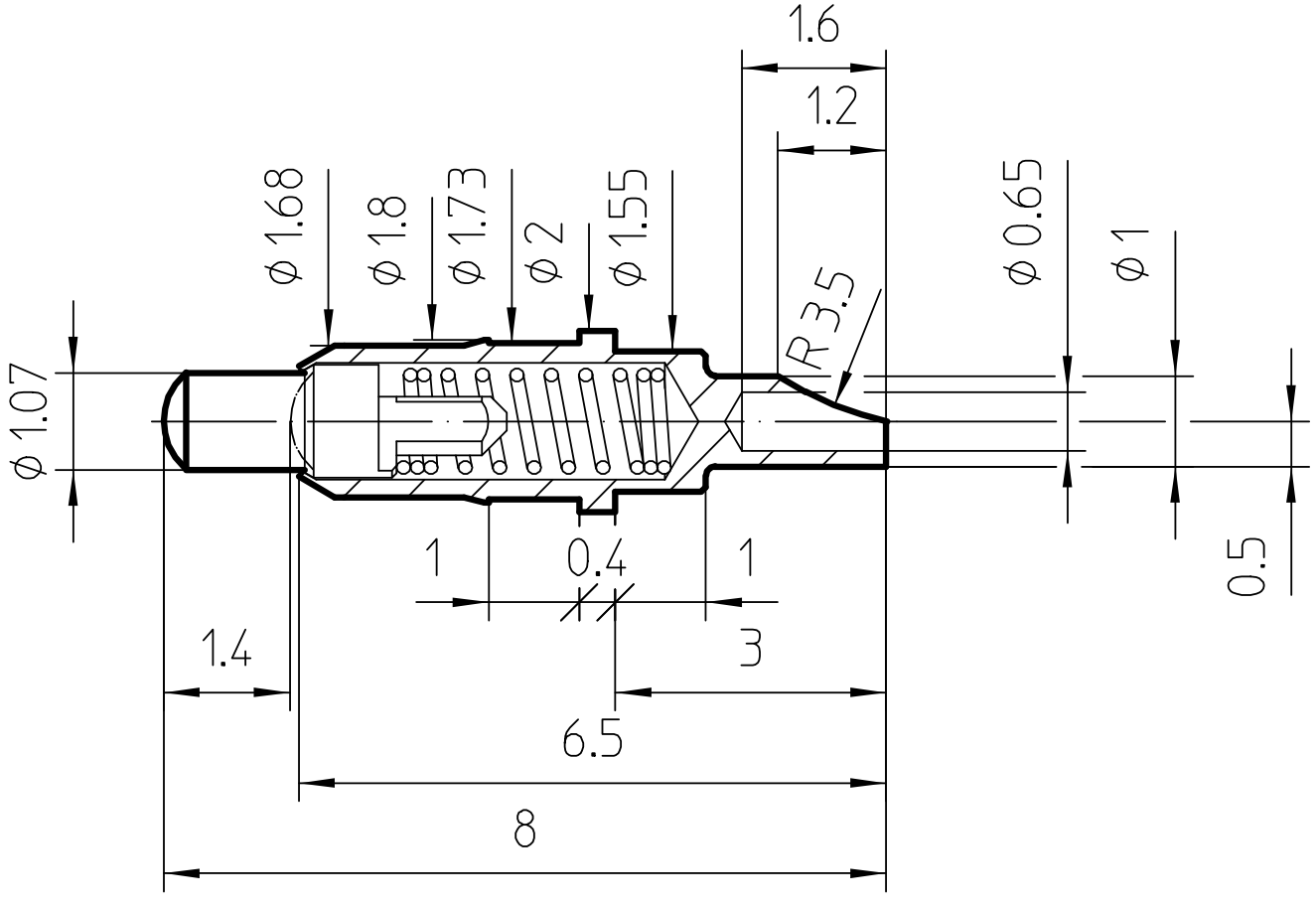

Note: Contact P/N is for basic contact,
please add suffix for plating code and,
for socket contacts, assembly code.

Contact P/N **90204**

preci-dip